MODEL: BC-3000

Installer Code: *9999#

Exit Programming**:** Press * (Until LED "ACCEPT" Blinking)

1) Install Cards

Installer PIN→

1→ Flash first card→ XXX→#→1→ Flash Second card→ XXX→#→1→ Flash Third card→ XXX→#……..***

Note: **XXX** is last 3digits number of card

2) Operation Mode

Installer PIN→

a) **300 #*** (**Card Only**) **--- default**

b) **301 #*** (**Card** and **PIN**)

c) **302 #*** (**Card** or **PIN**)

3) Add/ Changing User PIN

Note: Access without installer PIN.

Password number can be any 4digits, except '1234.'

* **→ Read User Card →1234 # XXXX# XXXX #**

(New Password) (Re-Enter New Password)

Release Door: Press→ User PIN #

---

4) Delete Card

Installer PIN→

a) **2→ Card number #*** (delete individual card by using last 3digits number of card)

b) **2→ Flash Card #*** (delete by using card)- more cards repeat

c) **2→ 0000 #*** (delete all user cards)

5) Door Release Time **(default 6sec)**

Installer PIN→ 4 →XX #*

(00-99sec)

6) Changing Installer Code

Installer PIN→ 0 → XXXX # XXXX #*

7) Setting Door Open Detection

Installer PIN→

a) 6 00 #* (disable) **---default**

b) 6 01 #* (enable)

8) Resetting To Factory Default Setting
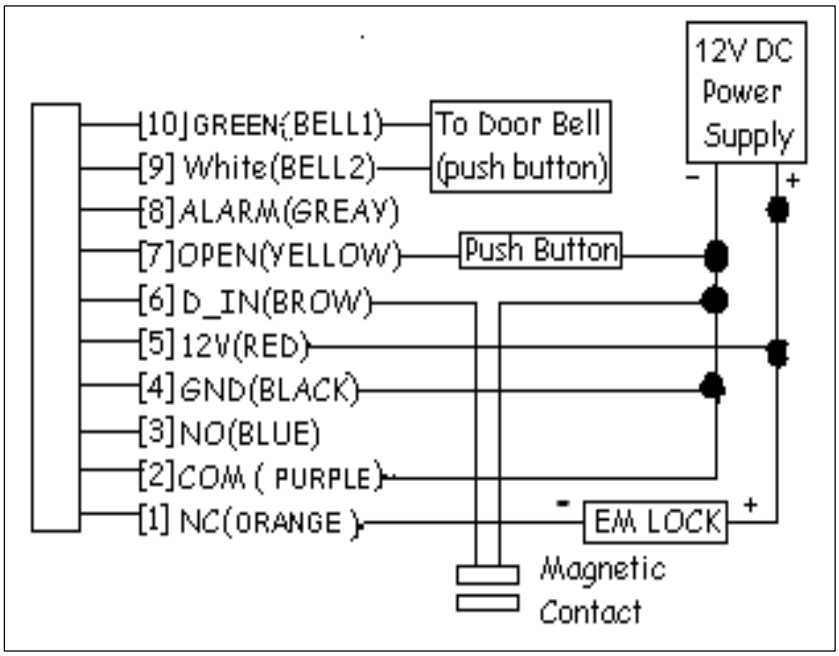
OFF Power → Press Reset Switch and Hold →ON Power Until Buzzer 'Beeping'